CARMET

SCREWCUTTING HOLDERS AND INSERTS

CUTTING TOOLS FOR LATHES AND MILLS

CONTENTS

Screwcutting Inserts .....page 3

External Toolholders .....page 7

Internal Toolholders .....page 10

Application Guide .....page 12

CARMET'S screw cutting system is designed around the lay down insert, which is the industry's unofficial standard. This makes it compatible with many competitors holders and inserts. The inserts are precision manufactured in the U.S.A. A wide range of inserts is available in uncoated and coated grades to cover most screw cutting applications.

ATUCA brand toolholders are manufactured in Australia by **CARMET** using the highest quality materials and the latest automatic and C.N.C. equipment.

A brief description of the process -

(1) Starting with hot rolled and annealed high tensile steel the material is cut to length in an automatic bandsaw.

(2) Jigged in automatic milling machine the material is machined to shape - every surface.

(3) Jigged in C.N.C. machining centre, the head and insert pocket are precision machined.

(4) The branding/numbering is then performed on a C.N.C. dot-marking machine - Note: - A feature of Atuca brand toolholders is that the spare parts are identified on the shank.

(5) The next process is oil hardening and tempering (42 - 45 rockwell C) of the toolholder.

(6) The surface finish is then applied using a hot process. This black finish is not only for appearance, it also protects the tool from oxidisation.

(7) The last process is of course assembling of the tool (anvil, clamp, screw etc.) packaging and labelling.

As well as the standard range of toolholders, Carmet can manufacture to your specifications or design and manufacture tooling to suit your requirements.

Qualified tools (i.e. precision ground for centre height, length and width) are also available on request.

THREADING INSERT IDENTIFICATION - PARTIAL PROFILE

1	2	3	4	5
16	ER	G	60	TIN30

1 Size of insert -
- 11 = 1/4" Inscribed circle
- 16 = 3/8" Inscribed circle
- 22 = 1/2" Inscribed circle
- 27 = 5/8" Inscribed circle

2 Hand of insert -
- ER = External right-hand/Internal left-hand
- IR = Internal right-hand/External left-hand

3 Pitch Range -
- A = 0.5 - 1.5mm (48 - 16 TPI)
- AG = 0.5 - 3.0mm (48 - 8 TPI)
- G = 1.75 - 3.0mm (14 - 8 TPI)
- N = 3.5 - 5.0mm (7 - 5 TPI)
- Q = 5.5 - 6.0mm (4.5 - 4 TPI)

4 Included Angle -
- 55 = 55 Degrees
- 60 = 60 Degrees

5 Grade of insert -
- SF30 = Uncoated (P25)
- TIN30 = Coated (P30)
- TICN20 = Coated (P20)

THREADING INSERT IDENTIFICATION - FULL FORM

1	2	3	4	5
16	ER	1.75	ISO	TIN30

1 Size of insert -
- 11 = 1/4" Inscribed circle
- 16 = 3/8" Inscribed circle
- 22 = 1/2" Inscribed circle
- 27 = 5/8" Inscribed circle

2 Hand of insert -
- ER = External right-hand/Internal left-hand
- IR = Internal right-hand/External left-hand

3 Pitch in millimetres for ISO.
Threads per inch for all others.

4 Thread type –
- ISO = Metric
- W = BSW, BSF, BSP, BSPT, BA, etc
- UN = Unified - UNC, UNF, UNEF, UNS, etc
- TR = Trapezoidal (30 Degrees)
- ACME = ACME (29 Degrees)
- ST. ACME = Stub ACME (29 Degrees)

5 Grade of insert –
- SF30 (Uncoated)
- TIN30 (Coated P30)
- TICN20 (Coated P20)

GRADE	APPLICATION
SF30 (P25)	Uncoated grade suitable for steel and stainless steel in unstable conditions where speed and/or rigidity is a problem
TIN30 (P30)	General purpose PVD coated grade suitable for carbon steel, stainless steel and cast iron **FIRST CHOICE.**
TICN20 (P20)	PVD coated grade (harder than TIN30) suitable for stainless steel, difficult to machine materials and cast iron

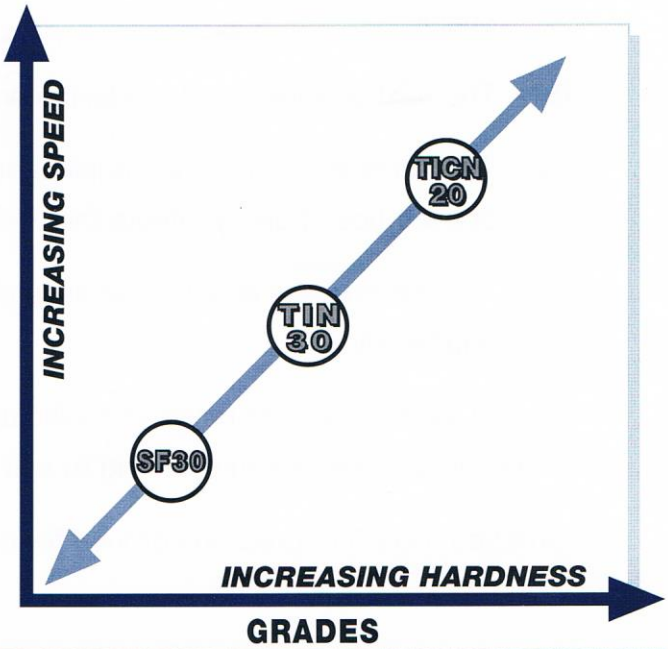

THREADING INSERTS PARTIAL PROFILE 60 DEGREES

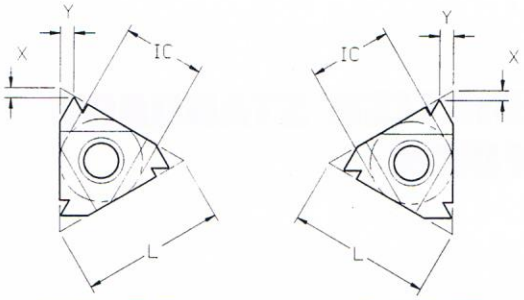

ER INSERT IR INSERT

INSERT	DIMENSIONS (MM) IC	L	X	Y	PITCH	TPI
11 IR A 60	1/4"	11	0.8	0.9	0.5-1.5	48-16
16 ER AG 60	3/8"	16	1.2	1.7	0.5-3.0	48-8
16 IR AG 60	3/8"	16	1.2	1.7	0.5-3.0	48-8
16 ER G 60	3/8"	16	1.2	1.7	1.75-3.0	14-8
16 IR G 60	3/8"	16	1.2	1.7	1.75-3.0	14-8
22 ER N 60	1/2"	22	1.7	2.5	3.5-5.0	7-5
22 IR N 60	1/2"	22	1.7	2.5	3.5-5.0	7-5
27 ER 60	5/8"	27	2.1	3.1	5.5-6.0	4.5-4
27 IR Q 60	5/8"	27	2.1	3.1	5.5-6.0	4.5-4

THREADING INSERTS PARTIAL PROFILE 55 DEGREES

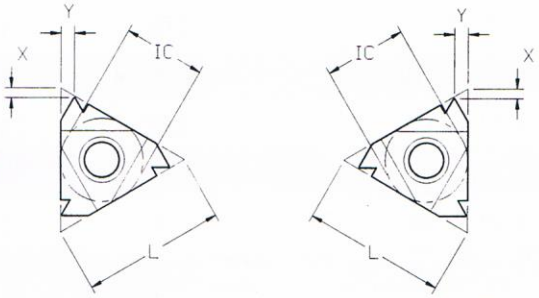

ER INSERT IR INSERT

INSERT	DIMENSIONS (MM) IC	L	X	Y	PITCH	TPI
11 IR A 55	1/4"	11	0,8	0.9	0.5-1.5	48-16
16 ER AG 55	3/8"	16	1.2	1.7	0.5-3.0	48-8
16 IR AG 55	3/8"	16	1.2	1.7	0.5-3.0	48-8
16 ER G 55	3/8"	16	1.2	1.7	1.75-3.0	14-8
16 IR G 55	3/8"	16	1.2	1.7	1.75-3.0	14-8
22 ER N 55	1/2"	22	1.7	2.5	3.5-5.0	7-5
22 IR N 55	1/2"	22	1.7	2.5	3.5-5.0	7-5
27 ER Q 55	5/8"	27	2.1	3.1	5.5-6.0	4.5-4
27 IR Q 55	5/8"	27	2.1	3.1	5.5-6.0	4.5-4

I.S.O. METRIC

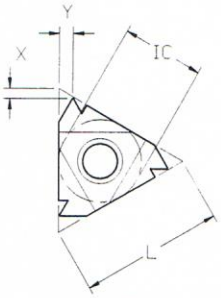

ER INSERT

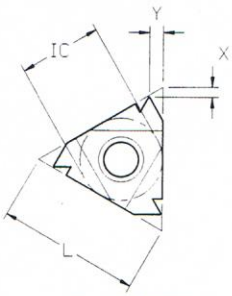

IR INSERT

INSERT NUMBER	IC	DIMENSIONS (MM) L	X	Y	INCLUDED ANGLE	PITCH
11 IR 1.00 I.S.O.	1/4"	11	0.6	0.7	60	1.00mm
11 IR 1.25 I.S.O.	1/4"	11	0.8	0.8	60	1.25mm
11 IR 1.50 I.S.O.	1/4"	11	0.8	1.0	60	1.50mm
11 IR 1.75 I.S.O.	1/4"	11	0.8	1.1	60	1.75mm
16 ER 1.00 I.S.O.	3/8"	16	0.7	0.7	60	1.00mm
16 IR 1.00 I.S.O.	3/8"	16	0.6	0.7	60	1.00mm
16 ER 1.25 I.S.O.	3/8"	16	0.8	0.9	60	1.25mm
16 IR 1.25 I.S.O.	3/8"	16	0.8	0.9	60	1.25mm
16 ER 1.50 I.S.O.	3/8"	16	0.8	1.0	60	1.50mm
16 IR 1.50 I.S.O.	3/8"	16	0.8	1.0	60	1.50mm
16 ER 1.75 I.S.O.	3/8"	16	0.9	1.2	60	1,75mm
16 IR 1.75 I.S.O.	3/8"	16	0.9	1.2	60	1,75mm
16 ER 2.00 I.S.O.	3/8"	16	1.0	1.3	60	2.00mm
16 IR 2.00 I.S.O.	3/8"	16	1.0	1.3	60	2.00mm
16 ER 2.50 I.S.O.	3/8"	16	1.1	1.5	60	2.50mm
16 IR 2.50 I.S.O.	3/8"	16	1.1	1.5	60	2.50mm
16 ER 3.00 I.S.O.	3/8"	16	1.2	1.6	60	3.00mm
16 IR 3.00 I.S.O.	3/8"	16	1.1	1.5	60	3.00mm
22 ER 3.50 I.S.O.	1/2"	22	1.6	2.3	60	3.50mm
22 IR 3.50 I.S.O.	1/2"	22	1.6	2.3	60	3.50mm
22 ER 4.00 I.S.O.	1/2"	22	1.6	2.3	60	4.00mm
22 IR 4.00 I.S.O.	1/2"	22	1.6	2.3	60	4.00mm
22 ER 4.50 I.S.O.	1/2"	22	1.7	2.4	60	4.50mm
22 IR 4.50 I.S.O.	1/2"	22	1.6	2.4	60	4.50mm
22 ER 5.00 I.S.O.	1/2"	22	1.7	2.5	60	5.00mm
22 IR 5.00 I.S.O.	1/2"	22	1.6	2.3	60	5.00mm

BRITISH STANDARD FORM

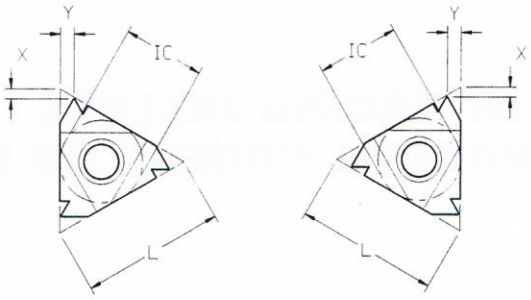

ER INSERT IR INSERT

INSERT NUMBER	IC	DIMENSIONS (MM) L	X	Y	INCLUDED ANGLE	TPI
11 IR 11 W	1/4"	11	0.9	1.2	55	11
11 IR 12 W	1/4"	11	1.0	1.1	55	12
11 IR 14 W	1/4"	11	0.9	1.1	55	14
11 IR 16 W	1/4"	11	0,9	1.1	55	16
11 IR 18 W	1/4"	11	0.8	1.0	55	18
11 IR 20 W	1/4"	11	0.8	0.9	55	20
16 ER 8 W	3/8"	16	1.2	1.5	55	8
16 IR 8 W	3/8"	16	1.2	1.5	55	8
16 ER 9 W	3/8"	16	1.2	1.7	55	9
16 IR 9 W	3/8"	16	1.2	1.7	55	9
16 ER 10 W	3/8"	16	1.1	1.5	55	10
16 IR 10 W	3/8"	16	1.1	1.5	55	10
16 ER 11 W	3/8"	16	1.1	1.5	55	11
16 IR 11 W	3/8"	16	1.1	1.5	55	11
16 ER 12 W	3/8"	16	1.1	1.4	55	12
16 IR 12 W	3/8"	16	1.1	1.4	55	12
16 ER 14 W	3/8"	16	1.0	1.2	55	14
16 IR 14 W	3/8"	16	1.0	1.2	55	14
16 ER 16 W	3/8"	16	0.9	1.1	55	16
16 IR 16 W	3/8"	16	0.9	1.1	55	16
16 ER 18 W	3/8"	16	0.8	1.0	55	18
16 IR 18 W	3/8"	16	0.8	1.0	55	18
16 ER 20 W	3/8"	16	0.8	0.9	55	20
16 IR 20 W	3/8"	16	0.8	0.9	55	20
22 ER 5 W	1/2"	22	1.7	2.4	55	5
22 IR 5 W	1/2"	22	1.7	.4	55	5
22 ER 6 W	1/2"	22	1.6	2.3	55	6
22 IR 6 W	1/2"	22	1.6	2.3	55	6
22 ER 7 W	1/2"	22	1.6	2.3	55	7
22 IR 7 W	1/2"	22	1.6	2.3	55	7

UNIFIED FORM

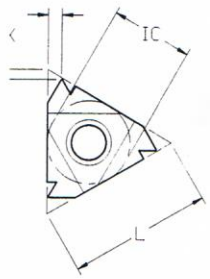

ER INSERT

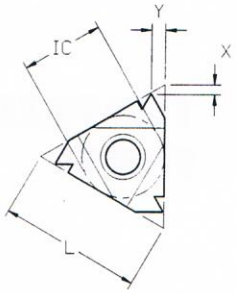

IR INSERT

INSERT NUMBER	IC	DIMENSIONS (MM) L	X	Y	INCLUDED ANGLE	TPI
11 IR 11 UN	1/4"	11	0.8	1.1	60	11
11 IR 12 UN	1/4"	11	0.9	1.1	60	12
11 IR 13 UN	1/4"	11	0.8	1.0	60	13
11 IR 14 UN	1/4"	11	0.9	1.1	60	14
11 IR 16 UN	1/4"	11	0.9	1.1	60	16
11 IR 18 UN	1/4"	11	0.8	1.0	60	18
16 ER 8 UN	3/8"	16	1.2	1.6	60	8
16 IR 8 UN	3/8"	16	1.1	1.5	60	8
16 ER 9 UN	3/8"	16	1.2	1.7	60	9
16 IR 9 UN	3/8"	16	1.2	1.7	60	9
16 ER 10 UN	3/8"	16	1.1	1.5	60	10
16 IR 10 UN	3/8"	16	1.1	1.5	60	10
16 ER 11 UN	3/8"	16	1.1	1.5	60	11
16 IR 11 UN	3/8"	16	1.1	1.5	60	11
16 ER 12 UN	3/8"	16	1.1	1.4	60	12
16 IR 12 UN	3/8"	16	1.1	1.4	60	12
16 ER 13 UN	3/8"	16	1.0	1.3	60	13
16 IR 13 UN	3/8"	16	1.0	1.3	60	13
16 ER 14 UN	3/8"	16	1.0	1.2	60	14
16 IR 14 UN	3/8"	16	0.9	1.2	60	14
16 ER 16 UN	3/8"	16	0.9	1.1	60	16
16 IR 16 UN	3/8"	16	0.9	1.1	60	16
16 ER 18 UN	3/8"	16	0.8	1.0	60	18
16 IR 18 UN	3/8"	16	0.8	1.0	60	18
16 ER 20 UN	3/8"	16	0.8	0.9	60	20
16 IR 20 UN	3/8"	16	0.8	0.9	60	20
16 ER 24 UN	3/8"	16	0.7	0.8	60	24
16 IR 24 UN	3/8"	16	0.7	0.8	60	24
16 ER 28 UN	3/8"	16	0.6	0.7	60	28
16 IR 28 UN	3/8"	16	0.6	0.7	60	28
22 ER 5 UN	1/2"	22	1.7	2.5	60	5
22 IR 5 UN	1/2"	22	1.6	2.3	60	5
22 ER 6 UN	1/2"	22	1.6	2.3	60	6
22 IR 6 UN	1/2"	22	1.6	2.3	60	6
22 ER 7 UN	1/2"	22	1.6	2.3	60	7
22 IR 7 UN	1/2"	22	1.6	2.3	60	7

TRAPEZOIDAL FORM

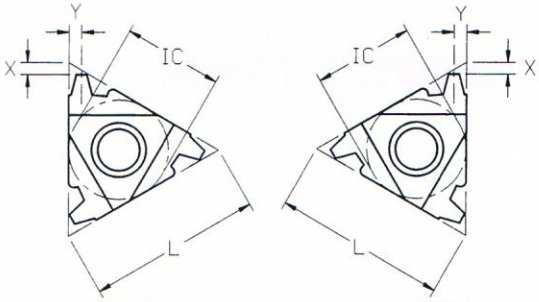

ER INSERT IR INSERT

INSERT NUMBER	IC	DIMENSIONS (MM) L	X	Y	INCLUDED ANGLE	TPI
16 ER 8 ACME	3/8"	16	1.5	1.5	29	8
16 IR 8 ACME	3/8"	16	1.5	1.5	29	8
16 ER 10 ACME	3/8"	16	1.3	1.3	29	10
16 IR 10 ACME	3/8"	16	1.3	1.3	29	10
16 ER 12 ACME	3/8"	16	1.1	1.2	29	12
16 IR 12 ACME	3/8"	16	1.1	1.2	29	12
16 ER 6 ST. ACME	3/8"	16	1.8	1.8	29	6
16 IR 6 ST. ACME	3/8"	16	1.8	1.8	29	6
16 ER 8 ST. ACME	3/8"	16	1.5	1.5	29	8
16 IR 8 ST. ACME	3/8"	16	1.5	1.5	29	8
16 ER 10 ST. ACME	3/8"	16	1.3	1.3	29	10
16 IR 10 ST. ACME	3/8"	16	1.3	1.3	29	10
16 ER 12 ST. ACME	3/8"	16	1.2	1.2	29	12
16 IR 12 ST. ACME	3/8"	16	1.2	1.2	29	12
16 ER 1.5 TR.	3/8"	16	1.0	1.1	30	1.5 PITCH
16 IR 1.5 TR.	3/8"	16	1.0	1.1	30	1.5 PITCH
16 ER 2.0 TR.	3/8"	16	1.0	1.3	30	2.0 PITCH
16 IR 2.0 TR.	3/8"	16	1.0	1.3	30	2.0 PITCH
16 ER 3.0 TR.	3/8"	16	1.3	1.5	30	3.0 PITCH
16 IR 3.0 TR.	3/8"	16	1.3	1.5	30	3.0 PITCH
22 ER 4.0 TR.	1/2"	22	1.8	1.9	30	4.0 PITCH
22 IR 4.0 TR.	1/2"	22	1.8	1.9	30	4.0 PITCH
22 ER 5.0 TR.	1/2"	22	2.0	2.4	30	5.0 PITCH
22 IR 5.0 TR.	1/2"	22	2.0	2.4	30	5.0 PITCH
27 ER 6.0 TR.	5/8"	27	2.3	2.7	30	6.0 PITCH
27 IR 6.0 TR.	5/8"	27	2.3	2.7	30	6.0 PITCH

EXTERNAL TOOL HOLDERS SXGNL/R

RIGHT-HAND VERSION SHOWN

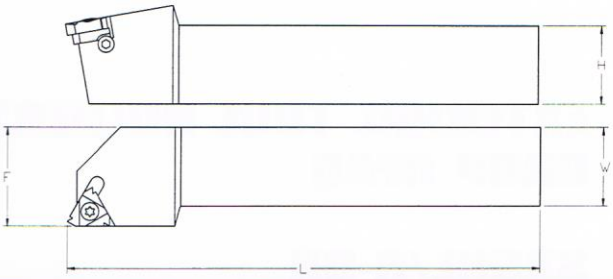

TOOL NUMBER	DIMENSIONS (MM) H	W	L	F	INSERT
SXGNL 1212F16	12	12	80	16	16IR
SXGNR 1212F16	12	12	80	16	16ER
SXGNL 1616H16	16	16	100	20	16IR
SXGNR 1616H16	16	16	100	20	16ER
SXGNL 2020K16	20	20	125	25	16IR
SXGNR 2020K16	20	20	125	25	16ER
SXGNL 2525M16	25	25	150	32	16IR
SXGNR 2525M16	25	25	150	32	16ER
SXGNL 2525M22	25	25	150	32	22IR
SXGNR 2525M22	25	25	150	32	22ER
SXGNL 3225P22	32	25	170	32	22IR
SXGNR 3225P22	32	25	170	32	22ER
SXGNL 3232P27	32	32	170	40	27IR
SXGNR 3232P27	32	32	170	40	27ER

SPARE PARTS

TOOL NUMBER	ANVIL	ANVIL SCREW	INSERT SCREW	KEY
SXGNL 1212F16	-	-	1335S	T-15S
SXGNR 1212F16	-	-	1335S	T-15S
SXGNL 1616H16	3425S	1093S	1335S	T-15S
SXGNR 1616H16	3424S	1093S	1335S	T-15S
SXGNL 2020K16	3425S	1093S	1335S	T-15S
SXGNR 2020K16	3424S	1093S	1335S	T-15S
SXGNL 2525M16	3425S	1093S	1335S	T-15S
SXGNR 2525M16	3424S	1093S	1335S	T-15S
SXGNL 2525M22	3431S	1094S	1340S	T-15S
SXGNR 2525M22	3430S	1094S	1340S	T-15S
SXGNL 3225P22	3431S	1094S	1340S	T-15S
SXGNR 3225P22	3430S	1094S	1340S	T-15S
SXGNL 3232P27	3436S	1095S	1350S	T-25S
SXGNR 3232P27	3435S	1095S	1350S	T-25S

EXTERNAL TOOL HOLDERS DROP HEAD

SXGNL/R-DH

RIGHT-HAND VERSION SHOWN

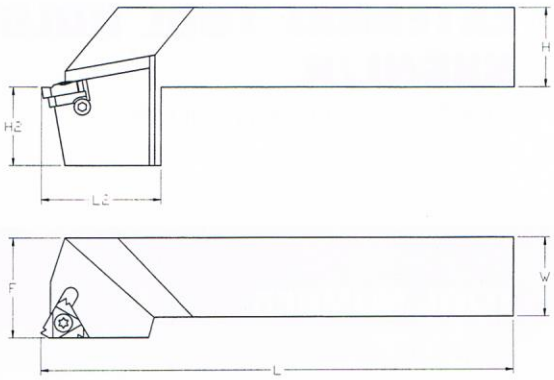

TOOL NUMBER	H	W	L	DIMENSIONS (MM) F	H2	L2	INSERT
SXGNL 2020K16-DH	20	20	125	25	17.5	38	16IR
SXGNR 2020K16-DH	20	20	125	25	17.5	38	16ER
SXGNL 2525M16-DH	25	25	150	32	22	38	16IR
SXGNR 2525M16-DH	25	25	150	32	22	38	16ER
SXGNL 2525M22-DH	25	25	150	32	22	38	22IR
SXGNR 2525M22-DH	25	25	150	32	22	38	22ER

SPARE PARTS

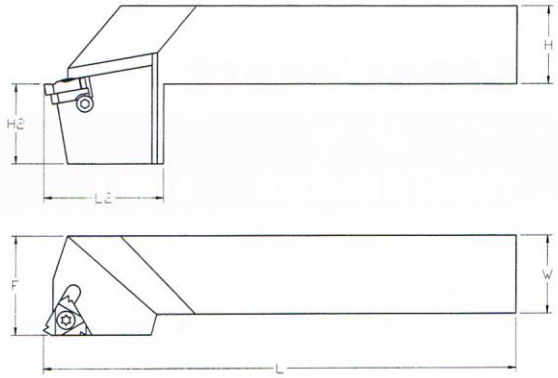

TOOL NUMBER	ANVIL	ANVIL SCREW	INSERT SCREW	KEY
SXGNL 2020K16-DH	3425S	1093S	1335S	T-15S
SXGNR 2020K16-DH	3424S	1093S	1335S	T-15S
SXGNL 2525M16-DH	3425S	1093S	1335S	T-15S
SXGNR 2525M16-DH	3424S	1093S	1335S	T-15S
SXGNL 2525M22-DH	3431S	1094S	1340S	T-15S
SXGNR 2525M22-DH	3430S	1094S	1340S	T-15S

HEAVY DUTY EXTERNAL TOOL HOLDER

CARMET'S heavy duty screw cutting tool is designed to cover a pitch range of 0.8mm to 6.0mm (32-4 TPI). Three different radii inserts ground to a 7 degree cutting rake allow the one tool to accommodate this broad range. Available in uncoated and coated.

T-04 – An uncoated grade in the P40 range. It is suitable for machining carbon steels and stainless steel. It is first choice for arduous conditions – interrupted cuts or where speed is a problem

TIN30 – A PVD coated grade in the P30 range. It is most suited for the machining of carbon steels and cast iron, or where higher speeds are required.

STECL/R

RIGHT-HAND VERSION SHOWN

TOOL NUMBER	DIMENSIONS (MM) H	W	L	F	ANVIL	ANVIL SCREW	INSERT SCREW	KEY
STECL 2020K16	20	20	125	17	3414	1750	1335	5516
STECR 2020K16	20	20	125	17	3414	1750	1335	5516
STECL 2525M16	25	25	150	22	3414	1750	1335	5516
STECR 2525M16	25	25	150	22	3414	1750	1335	5516

TCMX-16T3..

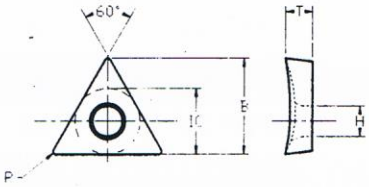

INSERT	DIMENSIONS (MM) IC	T	R	B	H	PITCH RANGE
TCMX-16T302	9.53	3.97	0.2	14.08	4.4	0.8-1.8 (32-14 TPI)
TCMX-16T304	9.53	3.97	0.4	13.89	4.4	1.8-3.0 (14-8 TPI)
TCMX-16T308	9.53	3.97	0.8	13.49	4.4	3.0-6.0 (8-4 TPI)

INTERNAL SCREW CUTTING

RIGHT-HAND VERSION SHOWN

TOOL NUMBER	DIMENSIONS (MM) D	L	F	H	MIN BORE	INSERT
S10K SXFNL-11	10	125	7.3	9	13	11ER
S10K SXFNR-11	10	125	7.3	9	13	11IR
S16M SXFNL-11	16	150	8.9	15	16	11ER
S16M SXFNR-11	16	150	8.9	15	16	11IR
S16M SXFNL-16	16	150	11.5	15	20	16ER
S16M SXFNR-16	16	150	11.5	15	20	16IR
S20Q SXFNL-16	20	180	13.4	18	24	16ER
S20Q SXFNR-16	20	180	13.4	18	24	16IR
S25S SXFNL-16	25	250	16.3	23	29	16ER
S25S SXFNR-16	25	250	16.3	23	29	16IR
S32T SXFNL-16	32	300	19.6	30	36	16ER
S32T SXFNR-16	32	300	19.6	30	36	16IR
S40T SXFNL-16	40	300	23.8	37	44	16ER
S40T SXFNR-16	40	300	23.8	37	44	16IR
S20Q SXFNL-22	20	180	15.6	18	27	22ER
S20Q SXFNR-22	20	180	15.6	18	27	22IR
S25S SXFNL-22	25	250	17.2	23	32	22ER
S25S SXFNR-22	25	250	17.2	23	32	22IR
S32T SXFNL-22	32	300	21.5	30	39	22ER
S32T SXFNR-22	32	300	21.5	30	30	22IR
S40T SXFNL-22	40	300	25.8	37	47	22ER
S40T SXFNR-22	40	300	25.8	37	47	22IR
S40T SXFNL-27	40	300	26.4	37	48	27ER
S40T SXFNR-27	40	300	26,4	37	48	27IR
S50U SXFNL-27	50	350	31.4	47	58	27ER
S50U SXFNR-27	50	350	31.4	47	58	27IR

SPARE PARTS

TOOL NUMBER	ANVIL	ANVIL SCREW	INSERT SCREW	KEY
S10K SXFNL-11	-	-	1225S	T-07S
S10K SXFNR-11	-	-	1225S	T-07S
S16M SXFNL-11	-	-	1225S	T-07S
S16M SXFNR-11	-	-	1225S	T-07S
S16M SXFNL-16	-	-	1635S	T-10S
S16M SXFNR-16	-	-	1635S	T-10S
S20Q SXFNL-16	3424S	1093S	1335S	T-15S
S20Q SXFNR-16	3425S	1093S	1335S	T-15S
S25S SXFNL-16	3424S	1093S	1335S	T-15S
S25S SXFNR-16	3425S	1093S	1335S	T-15S
S32T SXFNL-16	3424S	1093S	1335S	T-15S
S32T SXFNR-16	3425S	1093S	1335S	T-15S
S40T SXFNL-16	3424S	1093S	1335S	T-15S
S40T SXFNR-16	3425S	1093S	1335S	T-15S
S20Q SXFNL-22	-	-	1640S	T-15S
S20Q SXFNR-22	-	-	1640S	T-15S
S25S SXFNL-22	3430S	1094S	1340S	T-15S
S25S SXFNR-22	3431S	1094S	1340S	T-15S
S32T SXFNL-22	3430S	1094S	1340S	T-15S
S32T SXFNR-22	3431S	1094S	1340S	T-15S
S40T SXFNL-22	3430S	1094S	1340S	T-15S
S40T SXFNR-22	3431S	1094S	1340S	T-15S
S40T SXFNL-27	3435S	1095S	1350S	T-25S
S40T SXFNR-27	3436S	1095S	1350S	T-25S
S50U SXFNL-27	3435S	1095S	1350S	T-25S
S50U SXFNR-27	3436S	1095S	1350S	T-25S

APPLICATION AND TECHNICAL INFORMATION

CARMET'S laydown screw cutting system is versatile enough to allow for turning right-hand and left-hand threads without having multiple tools. By simply changing the carbide anvil you can compensate for various leads or machine left-hand threads with right-hand tools or right-hand threads with left-hand tools. Toolholders are manufactured with a 1.5 degree helix angle as standard; this will cover most common threads over a range of different diameters. By choosing the appropriate anvil from the list below, the tool can be altered from 1.5 degrees to a range from plus 4.5 degrees to minus 1.5 degrees. The negative anvils are required when using right-hand tools to machine left-hand threads or left-hand tools to machine right-hand threads.

Refer to helix chart at the bottom of this page to determine the appropriate anvil to suit the application required and then select the anvil from the list below.

1.5° Standard

Positive Helix

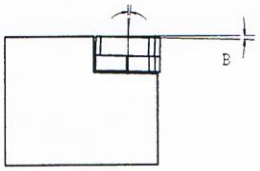

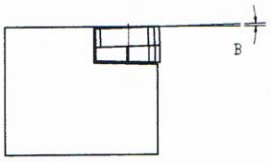

Negative Helix

HELIX ANGLE		4.5	3.5	2.5	1.5	0.5	0	-0.5	-1.5
INSERT SIZE	TOOL HOLDER	ANVIL PART NUMBER							
16MM	EXT. R.H. INT. L.H.	3424S+3	3424S+2	3424S+1	3424S	3424S-1	3424S-1.5	3424S-2	3424S-3
16MM	EXT. L.H. INT. R.H.	3425S+3	3425S+2	3425S+1	3425S	3425S-1	3425S-1.5	3425S-2	3425S-3
22MM	EXT. R.H. INT. L.H.	3430S+3	3430S+2	3430S+1	3430S	3430S-1	3430S-1.5	3430S-2	3430S-3
22MM	EXT. L.H. INT. R.H.	3431S+3	3431S+2	3431S+1	3431S	3431S-1	3431S-1.5	3430S-2	3431S-3
27MM	EXT. R.H. INT. L.H.	3435S+3	3435S+2	3435S+1	3435S	3435S-1	3435S-1.5	3435S-2	3435S-3
27MM	EXT. L.H. INT. R.H.	3436S+3	3436S+2	3436S+1	3436S	3436S-1	3436S-1.5	3436S-2	3436S-3

To calculate the helix angle of a given thread, use the following formula

$$\text{TAN } ß = \frac{P}{\pi \times D}$$

ß = ANGLE
P = PITCH OF THREAD
D = EFFECTIVE DIAMETER OF THREAD

π = 3.143

Refer to chart for approximate helix angles

CHART OF THREAD HELIX ANGLES

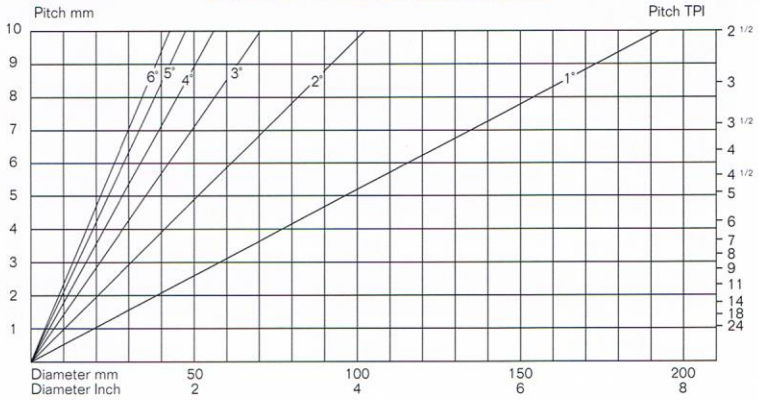

APPLICATION GUIDE

External Threading

Right-hand External Threading

- Rotation: counterclockwise
- Feed towards the chuck
- Right-hand holder and ER insert

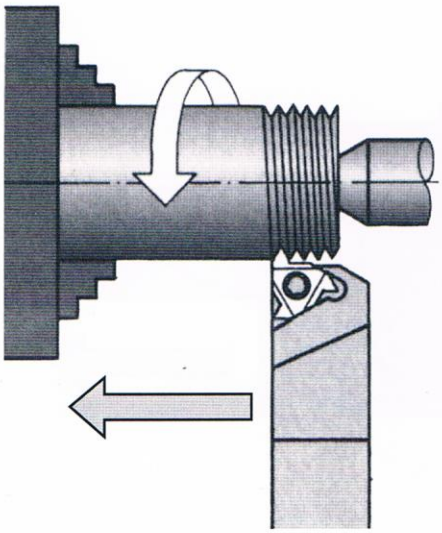

Right-hand External Threading

- Rotation: clockwise
- Feed away from the chuck
- Left-hand holder and IR insert

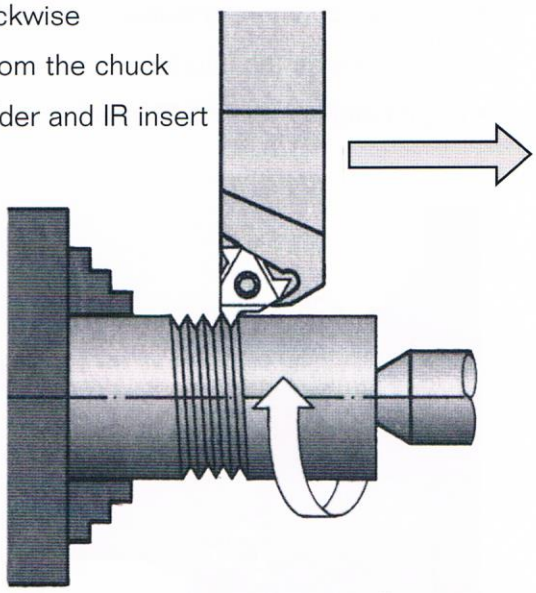

Left-hand External Threading

- Rotation: counterclockwise
- Feed away from the chuck
- Right-hand holder and ER insert

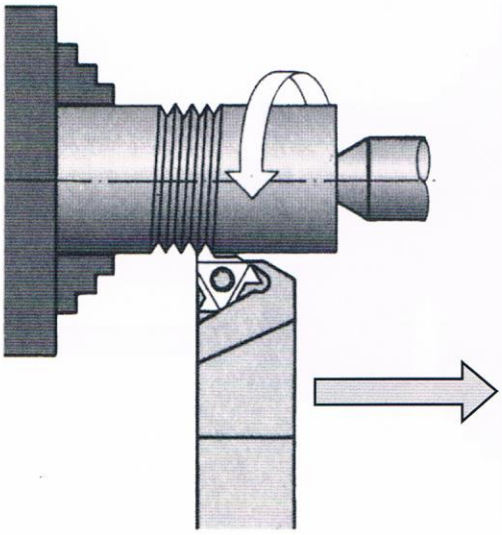

Left-hand External Threading

- Rotation: clockwise
- Feed towards the chuck
- Left-hand holder and IR insert

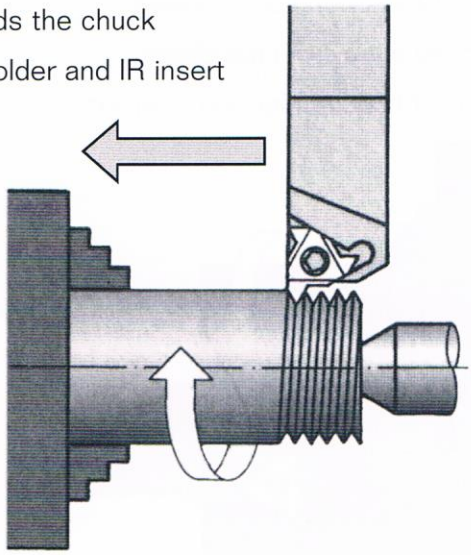

APPLICATION GUIDE

Internal Threading

Right-hand Internal Threading

- Rotation: counterclockwise
- Feed towards the chuck
- Right-hand holder and IR insert

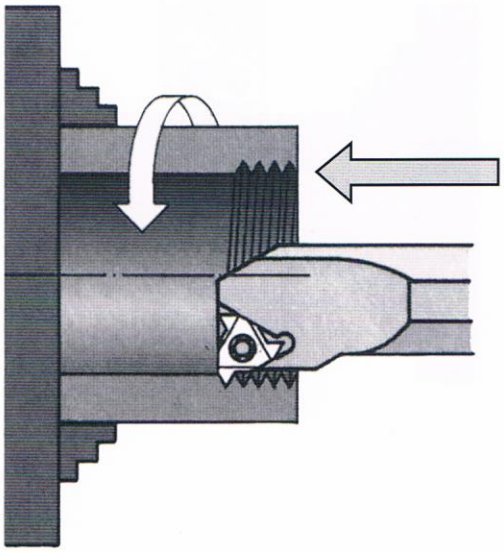

Right-hand Internal Threading

- Rotation: clockwise
- Feed away from the chuck
- Left-hand holder and ER insert

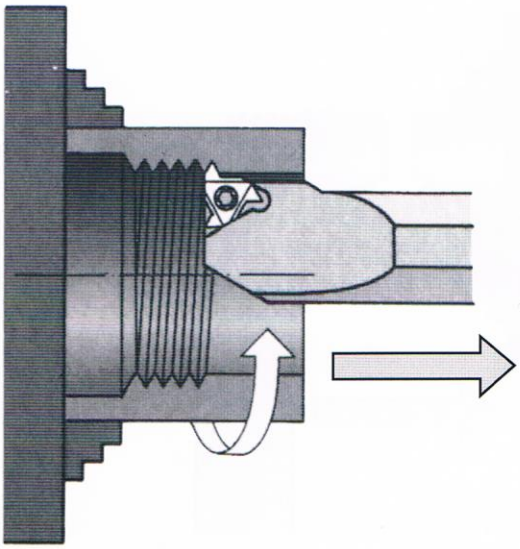

Left-hand Internal Threading

- Rotation: counterclockwise
- Feed away from the chuck
- Right-hand holder and IR insert

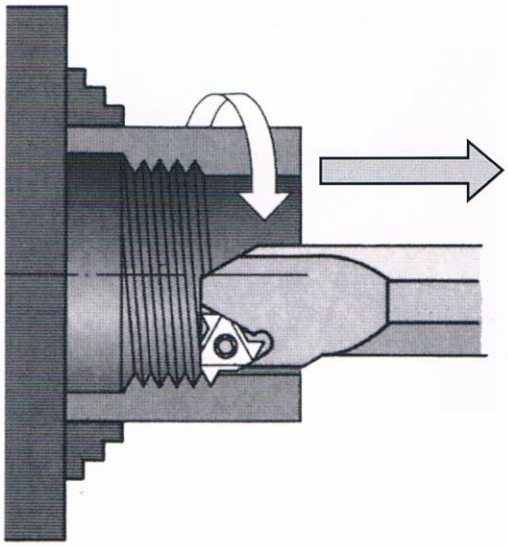

Left-hand Internal Threading

- Rotation: clockwise
- Feed towards the chuck
- Left-hand holder and ER insert

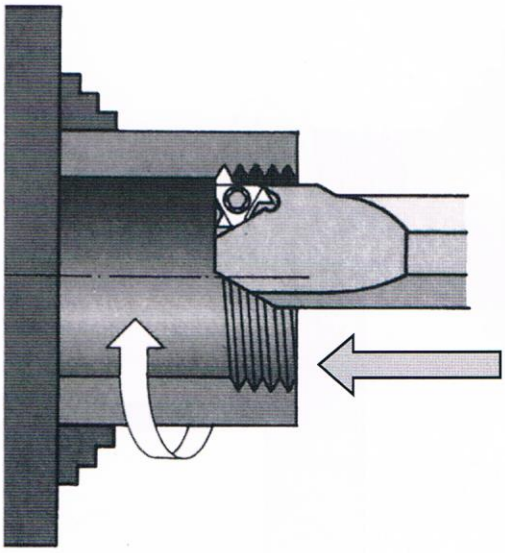

BASIC THREAD INFORMATION

BASIC 55* THREAD FORM
P = PITCH = 1/T.P.I.
D = DEPTH OF THREAD = 0.64033 X P
R = RADIUS = 0.13733 X P
The above formula cover threads such as - B.S.W., B.S.F., B.S.P.

BASIC 60* THREAD FORM
P = PITCH = 1/T.P.I.
D = DEPTH OF THREAD = 0.54127 X P (INT.)
D = DEPTH OF THREAD = 0.61344 X P (EXT.)
R = RADIUS = 0.14434 X P
The above formula cover threads such as - U.N.C., U.N.F., U.N.E.F., U.N.S., I.S.O.

BASIC B.A. FORM - 47.5 DEGREES
P = PITCH = 1/T.P.I.
D = DEPTH OF THREAD = 0.6 X P
R = RADIUS = 0.18083 X P

BASIC N.P.T. FORM - 60 DEGREES
P = PITCH = 1/T.P.I.
D = DEPTH OF THREAD = 0.8 X P
TRUNCATION FOR CREST AND ROOT OF THREAD = 0.033 X P

BASIC ACME FORM - 29 DEGREES
P = PITCH = 1/T.P.I.
D = DEPTH OF THREAD = 0.5 X P + 0.25MM

BASIC STUB ACME FORM - 29 DEGREES
P = PITCH = 1/T.P.I.
D = DEPTH OF THREAD = 0.3 X P + 0.25MM

BASIC TRAPAZOIDAL FORM - 30 DEGREES
P = PITCH
D = DEPTH OF THREAD = 0.5 X P + 0.25MM

THE FOLLOWING TABLES GIVE BASIC DIMENSIONS FOR SCREW CUTTING EXTERNAL THREADS - THESE DIMENSIONS ARE IN MILLIMETRES AND ARE THEORETICAL AND A GUIDE ONLY!

METRIC COURSE (I.S.O.)

NOMINAL SIZE	PITCH (MM)	MAJOR DIAMETER	EFFECTIVE DIAMETER	MINOR DIAMETER
M2	0.40	2.00	1.740	1.509
M2.2	0.45	2.20	1.908	1.648
M2.5	0.45	2.50	2.208	1.948
M3	0.50	3.00	2.675	2.387
M3.5	0.60	3.50	3.110	2.764
M4	0.70	4.00	3.545	3.141
M4.5	0.75	4.50	4.013	3.580
M5	0.80	5.00	4.480	4.019
M6	1.00	6.00	5.350	4.773
M7	1.00	7.00	6.350	5.773
M8	1.25	8.00	7.188	6.466
M10	1.50	10.0	9.026	8.160
M12	1.75	12.0	10.863	9.853
M14	2.00	14.0	12.701	11.546
M16	2.00	16.0	14.701	13.546
M18	2.50	18.0	16.376	14.933
M20	2.50	20.0	18.376	16.933
M22	2.50	22.0	20.376	18.933
M24	3.00	24.0	22.051	20.319
M27	3.00	27.0	25.051	23.319
M30	3.50	30.0	27.727	25.706
M33	3.50	33.0	30.727	28.706
M36	4.00	36.0	33.402	31.093
M39	4.00	39.0	36.402	34.093
M42	4.50	42.0	39.077	36.479
M45	4.50	45.0	42.077	39.479
M48	5.00	48.0	44.752	41.866
M52	5.00	52.0	48.752	45.866
M56	5.50	56.0	52.428	49.252
M60	5.50	60.0	56.428	53.252
M64	6.00	64.0	60.103	56.639
M68	6.00	68.0	64.103	60.639

BRITISH STANDARD WHITWORTH (B.S.W.)

NOMINAL SIZE	THREADS PER INCH	PITCH (MM)	MAJOR DIAMETER	EFFECTIVE DIAMETER	MINOR DIAMETER
1/8"	40	0.635	3.175	2.769	2.362
3/16"	24	1.058	4.763	4.084	3.406
1/4"	20	1.27	6.35	5.537	4.724
5/16"	18	1.411	7.938	7.033	6.129
3/8"	16	1.588	9.525	8.509	7.493
7/16"	14	1.814	11.123	9.952	8.79
1/2"	12	2.117	12.7	11.344	9.987
9/16"	12	2.117	14.288	12.931	11.574
5/8"	11	2.309	15.875	14.397	12.918
11/16"	11	2.309	17.463	15.984	14.506
3/4"	10	2.54	19.05	17.424	15.799
7/8"	9	2.822	22.225	20.419	18.613
1"	8	3.175	25.4	23.368	21.336
1.1/8"	7	3.629	28.575	26.251	23.927
1.1/4"	7	3.629	31.75	29.426	27.102
1.3/8"	6	4.233	34.925	32.215	29.505
1.1/2"	6	4.233	38.1	35.39	32.68
1.3/4"	5	5.08	44.45	41.196	37.943
2"	4.5	5.644	50.8	47.186	43.571
2.1/4"	4	6.35	57.15	53.083	49.017
2.1/2"	4	6.35	63.5	59.433	55.367
3.3/4"	3.5	7.257	69.85	65.202	60.554
3"	3.5	7.257	76.2	71.552	66.904
3.1/4"	3.25	7.815	82.55	77.546	72.542
3.1/2"	3.25	7.815	88.9	83.896	78.74
3.3/4"	3	8.467	95.25	89.83	84.409
4"	3	8.467	101.6	96.18	90.759
4.1/2"	2.875	8.835	114.3	108.643	102.987
5"	2.75	9.236	127.0	121.087	115.174
5.1/2"	2.625	9.676	139.7	133.505	127.31
6"	2.5	10.16	152.4	145.895	139.39

METRIC FINE (I.S.O.)

NOMINAL SIZE	PITCH (MM)	MAJOR DIAMETER	EFFECTIVE DIAMETER	MINOR DIAMETER
M3	0.35	3.00	2.773	2.570
M4	0.50	4.00	3.675	3.387
M5	0.50	5.00	4.675	4.387
M6	0.75	6.00	5.513	5.080
M7	0.75	7.00	6.531	6.080
M8	1.00	8.00	7.351	6.773
M10	1.25	10.0	9.188	8.466
M12	1.25	12.0	11.188	10.466
M14	1.50	14.0	13.026	12.160
M16	1.50	16.0	15.026	14.160
M18	1.50	18.0	17.026	16.160
M20	1.50	20.0	19.026	18.160
M22	1.50	22.0	21.026	20.160
M24	2.00	24.0	22.701	21.546
M27	2.00	27.0	25.701	24.546
M30	2.00	30.0	28.701	27.546

BRITISH STANDARD PIPE PARALLEL (B.S.P.F.)

NOMINAL SIZE	THREADS PER INCH	PITCH (MM)	MAJOR DIAMETER	EFFECTIVE DIAMETER	MINOR DIAMETER
1/16"	28	0.907	7.723	7.142	6.561
1/8"	28	0.907	9.728	9.147	8.566
1/4"	19	1.337	13.157	12.301	11.445
3/8"	19	1.337	16.662	15.806	14.950
1/2"	14	1.814	20.995	19.793	18.631
5/8"	14	1.814	22.911	21.749	20.587
3/4"	14	1.814	26.441	25.279	24.117
7/8"	14	1.814	30.201	29.039	27.877
1"	11	2.309	33.249	31.770	30.291
1.1/8"	11	2.309	37.897	36.418	34.939
1.1/4"	11	2.309	41.910	40.431	38.952
1.1/2"	11	2.309	47.803	46.324	44.845
1.3/4"	11	2.309	53.746	52.267	50.788
2"	11	2.309	59.614	58.135	56.656
2.1/4"	11	2.309	65.710	64.231	62.752
2.1/2"	11	2.309	75.184	73.705	72.226
2.3/4"	11	2.309	81.534	80.055	78.576
3"	11	2.309	87.884	86.405	84.926
3.1/2"	11	2.309	100.330	98.851	97.372
4"	11	2.309	113.030	111.551	110.072
4.1/2"	11	2.309	125.730	124.251	122.772
5"	11	2.309	138.430	136.951	135.472
5.1/2"	11	2.309	151.130	149.651	148.172
6"	11	2.309	163.830	162.351	160.872

BRITISH ASSOCIATION (B.A.)

NOMINAL SIZE	PITCH (MM)	MAJOR DIAMETER	EFFECTIVE DIAMETER	MINOR DIAMETER
0	1.00	6.0	5.4	4.8
1	0.90	5.3	4.76	4.219
2	0.81	4.7	4.214	3.729
3	0.73	4.1	3.66	3.251
4	0.66	3.6	3.205	2.809
5	0.59	3.2	2.845	2.489
6	0.53	2.8	2.482	2.159
7	0.48	2.5	2.21	1.92
8	0.43	2.2	1.94	1.679
9	0.39	1.9	1.666	1.43
10	0.35	1.7	1.491	1.28

AMERICAN NATIONAL TAPER PIPE (N.P.T.)

TAPER = 1 IN 16

NOMINAL SIZE	O.D. OF PIPE	THREADS PER INCH	PITCH (MM)	EFFECTIVE DIAMETER AT BEGINNING OF EXTERNAL THREAD	EFFECTIVE DIAMETER AT BEGINNING OF INTERNAL THREAD
1/16"	7.938	27	0.941	6.888	7.142
1/8"	10.287	27	0.941	9.233	9.489
1/4"	13.716	18	1.411	12.126	12.487
3/8"	17.145	18	1.411	15.545	15.926
1/2"	21.336	14	1.814	19.264	19.772
3/4"	26.670	14	1.814	24.579	25.117
1"	33.401	11.5	2.209	30.826	31.461
1.1/4"	42.164	11.5	2.209	39.515	40.218
1.1/2"	48.260	11.5	2.209	45.621	46.287
2"	60.235	11.5	2.209	57.633	58.325
2.1/2"	73.025	8	3.175	68.884	70.159
3"	88.900	8	3.175	84.939	86.068
3.1/2"	101.600	8	3.175	97.473	98.776
4"	114.300	8	3.175	110.093	111.433
5"	141.300	8	3.175	136.925	138.412
6"	168.275	8	3.175	163.731	165.252

UNIFIED COURSE (U.N.C.)

NOMINAL SIZE	THREADS PER INCH	PITCH (MM)	MAJOR DIAMETER	EFFECTIVE DIAMETER	MINOR DIAMETER
1	64	0.397	1.854	1.598	1.367
2	56	0.454	2.184	1.900	1.628
3	48	0.529	2.515	2.172	1.864
4	40	0.635	2.845	2.433	2.065
5	40	0.635	3.175	2.764	2.395
6	32	0.794	3.505	2.990	2.532
8	32	0.794	4.166	3.650	3.193
10	24	1.058	4.826	4.138	3.528
12	24	1.058	5.334	4.798	4.188
1/4"	20	1.270	6.350	5.525	4.793
5/16"	18	1.411	7.938	7.021	6.205
3/8"	16	1.588	9.525	8.494	7.577
7/16"	14	1.814	11.113	9.934	8.887
1/2"	13	1.954	12.700	11.430	10.302
9/16"	12	2.117	14.288	12.913	11.692
5/8"	11	2.309	15.875	14.376	13.043
3/4"	10	2.540	19.050	17.399	15.933
7/8"	9	2.822	22.225	20.391	18.763
1"	8	3.175	25.400	23.338	21.504
1.1/8"	7	3.629	28.575	26.218	24.122
1.1/4"	7	3.629	31.750	29.393	27.297
1.3/8"	6	4.233	34.925	32.174	29.731
1.1/2"	6	4.233	38.100	35.349	32.906
1.3/4"	5	5.080	44.450	41.151	38.217
2"	4.5	5.644	50.800	47.135	43.876
2.1/4"	4.5	5.644	57.150	53.485	50.226
2.1/2"	4	6.350	63.500	59.375	55.710
2.3/4"	4	6.350	69.850	65.725	62.060
3"	4	6.350	76.200	72.075	68.410
3.1/4"	4	6.350	82.550	78.425	74.760
3.1/2"	4	6.350	88.900	84.775	81.110
3.3/4"	4	6.350	95.250	91.125	87.460
4"	4	6.350	101.60	97.475	93.810

BRITISH STANDARD TAPER PIPE (B.S.P.T.)

NOMINAL SIZE	THREADS PER INCH	PITCH (MM)	MAJOR DIAMETER	EFFECTIVE DIAMETER	MINOR DIAMETER
1/16"	28	0.907	7.723	7.142	6.561
1/8"	28	0.907	9.728	9.147	8.566
1/4"	19	1.337	13.157	12.301	11.445
3/8"	19	1.337	16.662	15.806	14.950
1/2"	14	1.814	20.955	19.793	18.631
3/4"	14	1.814	26.441	25.279	24.117
1"	11	2.309	33.249	31.770	30.291
1.1/4"	11	2.309	41.190	40.431	38.952
1.1/2"	11	2.309	47.803	46.324	44.845
2"	11	2.309	59.614	58.135	56.656
2.1/2"	11	2.309	75.184	73.705	72.226
3"	11	2.309	87.884	86.405	84.296
4"	11	2.309	113.030	111.551	110.072
5"	11	2.309	138.430	136.951	135.472
6"	11	2.309	163.830	162.351	160.872

BRITISH STANDARD FINE (B.S.F.)

NOMINAL SIZE	THREADS PER INCH	PITCH (MM)	MAJOR DIAMETER	EFFECTIVE DIAMETER	MINOR DIAMETER
3/16"	32	0.794	4.763	4.256	3.748
7/32"	28	0.907	5.556	4.976	4.394
1/4"	26	0.977	6.35	5.725	5.100
9/32"	26	0.977	7.144	6.518	5.893
5/16"	22	1.155	7.938	7.198	6.459
3/8"	20	1.270	9.525	8.712	7.900
7/16"	18	1.411	11.113	10.208	9.304
1/2"	16	1.588	12.7	11.684	10.668
9/16"	16	1.588	14.288	13.272	12.256
5/8"	14	1.814	15.875	14.714	13.553
11/16"	14	1.814	17.463	16.302	15.141
3/4"	12	2.117	19.05	17.694	16.337
7/8"	11	2.309	22.225	20.747	19.268
1"	10	2.54	25.4	23.774	22.149
1.1/8"	9	2.822	28.575	26.769	24.963
1.1/4"	9	2.822	31.75	29.944	28.138
1.3/8"	8	3.175	34.925	32.893	30.861
1.1/2"	8	3.175	38.1	36.068	34.036
1.3/4"	7	3.629	44.45	42.126	39.802
2"	7	3.629	50.8	48.476	46.152
2.1/4"	6	4.233	57.15	54.44	51.73
2.1/2"	6	4.233	63.5	60.79	58.08
2.3/4"	6	4.233	69.85	67.14	64.43
3"	5	5.08	76.2	72.946	69.693
3.1/4"	5	5.08	82.55	79.3	76.043
3.1/2"	4.5	5.644	88.9	85.386	81.671
3.3/4"	4.5	5.644	95.25	91.636	88.021
4"	4.5	5.644	101.6	97.986	94.371
4.1/2"	4	6.35	114.3	103.883	99.817

UNIFIED EXTRA FINE (U.N.E.F.)

NOMINAL SIZE	THREADS PER INCH	PITCH (MM)	MAJOR DIAMETER	EFFECTIVE DIAMETER	MINOR DIAMETER
12	32	0.794	5.486	4.971	4.514
1/4"	32	0.794	6.350	5.834	5.377
5/16"	32	0.794	7.938	7.422	6.965
3/8"	32	0.794	9.525	9.009	8.552
7/16"	28	0.907	11.113	10.523	10.000
1/2"	28	0.907	12.700	12.111	11.587
9/16"	24	1.058	14.288	13.599	12.990
5/8"	24	1.058	15.875	15.187	14.577
11/16"	24	1.058	17.463	16.774	16.165
3/4"	20	1.270	19.050	18.225	17.493
13/16"	20	1.270	20.638	19.812	19.080
7/8"	20	1.270	22.225	21.400	20.668
15/16"	20	1.270	23.813	22.987	22.255
1"	20	1.270	25.400	24.575	23.843
1.1/16"	18	1.411	26.988	26.071	25.255
1.1/8"	18	1.411	28.575	27.658	26.843
1.3/16"	18	1.411	30.163	29.246	28.430
1.1/4"	18	1.411	31.750	30.833	30.018
1.5/16"	18	1.411	33.338	32.421	31.605
1.3/8"	18	1.411	34.925	34.008	33.193
1.7/16"	18	1.411	36.513	35.596	34.780
1.1/2"	18	1.411	38.100	37.183	36.368
1.9/16"	18	1.411	39.688	38.771	37.955
1.5/8"	18	1.411	41.275	40.358	39.543
1.11/16"	18	1.411	42.863	41.946	41.130

UNIFIED FINE (U.N.F.)

NOMINAL SIZE	THREADS PER INCH	PITCH (MM)	MAJOR DIAMETER	EFFECTIVE DIAMETER	MINOR DIAMETER
0	80	0.318	1.524	1.318	1.135
1	72	0.353	1.854	1.626	1.422
2	64	0.397	2.184	1.928	1.697
3	56	0.454	2.515	2.220	1.958
4	48	0.529	2.845	2.502	2.195
5	44	0.577	3.175	2.799	2.466
6	40	0.635	3.505	3.094	2.725
8	36	0.706	4.166	3.708	3.299
10	32	0.794	4.826	4.310	3.853
12	28	0.907	5.486	4.897	4.374
1/4"	28	0.907	6.350	5.761	5.237
5/16"	24	1.058	7.938	7.249	6.640
3/8"	24	1.058	9.525	8.837	8.227
7/16"	20	1.270	11.113	10.287	9.555
1/2"	20	1.270	12.700	11.875	11.143
9/16"	18	1.411	14.288	13.371	12.555
5/8"	18	1.411	15.875	14.958	14.143
3/4"	16	1.588	19.050	18.019	17.102
7/8"	14	1.814	22.225	21.046	20.000
1"	12	2.117	25.400	24.026	22.804
1.1/8"	12	2.117	28.575	27.201	25.979
1.1/4"	12	2.117	31.750	30.376	29.154
1.3/8"	12	2.117	34.925	33.551	32.329
1.1/2"	12	2.117	38.100	36.726	35.504

ECONOMICAL SPEEDS FOR SCREWCUTTING

DIAMETER IN MILLIMETRES	METRES PER MINUTE						
	12	18	26	38	58	85	120
6	640	920	1400	2000	3200	4400	6400
8	480	704	1040	1520	2400	3200	4800
12	320	464	704	1040	1520	2400	3200
16	240	352	528	768	1152	1680	2480
20	192	280	424	608	920	1360	2000
25	152	224	336	480	720	1080	1600
32	120	176	264	384	576	840	1240
40	96	144	208	304	456	672	1000
50	76	112	168	240	368	535	784
60	64	96	144	200	304	448	656
80	48	72	104	152	232	336	496
100	40	56	88	120	184	264	400
150	24	36	56	80	124	176	264
200	20	28	44	64	88	136	200
300	12	20	28	40	60	88	132

REVOLUTIONS PER MINUTE

MATERIAL	High Speed Steel	Uncoated Carbide	Coated Carbide
Mild Steel	26m/m	85m/m	120m/m
Medium Steel	18m/m	62m/m	85m/m
High Tensile Steel	12m/m	38m/m	58m/m

CERAMIC COATED CARBIDE - PLUS 25%

SAFETY PRECAUTIONS

WHEN USING CARBIDES & CERAMICS

1. Wear safety glasses with side shields
2. Wear closed shoes with steel toe caps
3. Wear protective clothing
4. Keep protective enclosure on machine in place during machining
5. Make sure insert size and shape is adequate for the work being performed
6. Chip control is necessary to prevent a continuous chip
7. Use correct size tooling with minimum overhang
8. Overloading of inserts may result in fracture with detached fragments travelling at high velocity
9. Chips are very hot and have sharp edges and should not be removed by hand
10. Turn off machine whenever chips are removed or when cutting tools are changed
11. A slug may be ejected at high speed during drilling

WHEN GRINDING CARBIDES

THINK FIRST

1. Use adequate ventilation
2. Use suction equipment to maintain low dust levels
3. Wet grind where possible
4. Minimize prolonged skin contact
5. Wash hands thoroughly after handling